Discover How To Easily Build a Portable Low Budget Power Generator

" Using an old Lawn Mower and materials you can pick up locally and cheap"
This is from another webpage which says that it is copyrighted but the links to Gemini didn't work and I will be happy to link them if I can find the source but a search on the Internet didn't turn it up.

Here's an easy and inexpensive way to build your own personal power generator. It's a handy little back up system to protect your family from black outs, storms, Y2K, etc. Or, maybe you simply want to get away from it all for a while. It's always nice to know that you can produce your own power whenever and wherever you are.

The following is a step by step tutorial. It shows you the parts you will need, the cost and the best places to get them. We then assemble the whole unit and wire it up, yes, we even include the wiring diagrams. The nice part about this unit is that the generator is built right into the lawn mower deck. You can even strap 2 or 3 batteries on the deck and steer the whole thing wherever you want to go.

Aside from showing you how to build the "Low Budget Power Generator", we are also going to show you how to easily expand your system by using a couple of extra items that will let you maximize your power producing potential. We kept the explanations as clear as possible so that you can keep your time and labor to a minimum. Quite frankly, we wanted to have some fun putting these systems together and hopefully you will too.

We'll be the first ones to admit, these homemade units do have their limitations and they aren't pretty, but they are practical. If you want pretty, go out and spend a pile of your hard earned money on a generator. If you can find one.

We have come up with 4 different ways to build these homemade generators depending on your preference of items, or the availability of parts in your area. We will use the complete lawn mower version for this tutorial.

First off let's discuss using the vertical shaft lawn mower engine, complete with the mower deck, handle and the works. It's a great idea to build this generator on its own mower deck because you then have an instant transportation system built in. We'll also show you a neat little device you can use to help your generator operate under heavy loads a lot smoother. Mount this on the handle next to your throttle and you will have full control of your generator right at your finger tips.

The Basic Parts You Will Need

The Motor

To drive our project we are going to use what is probably the most common lawn mower engine around, the Briggs & Stratton vertical shaft four-stroke gas engine, in the 3 to 3.5 horsepower range. You will have to remove the cutting blade and replace it with a drive pulley. It's important that the motor shaft extend at least 1 ¼" out of the bottom of the motor, as you will want your pulley to clear any obstacles like the motor mounting bolts.

Take a good look at the motor shaft, in most cases you have a 9/16" mounting bolt holding the cutting blade to a hub that's attached to the end of the motor shaft. The hub has a 3/16" key built in it to match the slot on the motor shaft, which is normally 7/8" in diameter. Make sure the motor shaft is keyed so that your pulley can be fastened securely. This will be the easiest set up you can find. If you run into a motor with a shaft that has only a threaded end and no key way, then walk away from this type of set up as it's way to much work and aggravation to attach a pulley to this type of shaft.

The Alternator

Automotive alternators are little power producing jewels that will be the heart of our systems. When driven by a lawn mower engine, we can produce a steady supply of quick, cheap and reliable power whenever we want. You can purchase alternators from Auto wreckers rebuilt or as is with a warranty for about $ 25.

While shopping around for all the different makes of alternators, Ford, Chrysler etc. We found the GM alternator the most favorable for our systems. There are two types of GM alternators, one with a built in voltage regulator and the other with an external voltage regulator. Use only a GM style alternator with a Built in Voltage Regulator, as they are easier to wire up and work with. We had three main goals in mind when we built our generators. Build em' cheap, safe and simple.

We built our projects using two different alternators with a 40 and 65 amp output. You may also run into different size casings of GM alternators, we stuck with the most common sized casing which measures slightly over 6 ½ " at the mounting hole openings. Your alternator should come with a two-wire molded connector/harness that plugs into the casing. You need this connector to hook up your alternator properly later on. Make sure you have it when you purchase or salvage your alternator. If not, you can pick one up at an automotive supply shop for a couple of dollars (more on this later).

The Power Inverter

The inverter is an electronic device that converts low voltage DC (direct current) electricity from a power source into a standard 120 volt AC (alternating current) that we use in our homes. The power generated from our alternator is a low voltage DC usually around 14 volts. In order to maximize our power capabilities we are going to add an inverter to the system. Inverters are sized by the amount of wattage they can output.

In the case of an emergency you will no doubt want to power some 120volt AC devices in and around your home. You will need to decide what you think is absolutely necessary to run during a power interruption and then calculate how much wattage (power) each device consumes.

You can do this by finding the manufactures rating plate on the appliance you wish to operate. Take the amperage rating of the device and multiply this by the household voltage. Example: An appliance drawing 5 amps of current multiplied by the household voltage. (5 amps x 120 volts = 600 watts). Inverters start as small as 50 watts, and an average household would use an inverter anywhere between 2500 to 4000 watts for "normal everyday operation". Their price tags start at about $40 to approximately $1000 to $2000 for the average home. So the choice is up to you as to which size inverter is right for you. Just remember, your planning for an emergency. If you use good power management you can keep your power consumption to lower levels.

Batteries

When we plan for emergencies, we normally store food, water and extra supplies.....why not power? With your home built systems you have the better of both worlds. You can use the generator to charge a battery or bank of batteries then switch over to directly powering a DC to AC inverter for 120 volt purposes. Then you can use your batteries to power up a selection of 12 volt lights and gadgets. You did buy some 12 volt back up lights didn't you? Or you can reverse the process and run your power inverter off the batteries, the choice is yours.

In an emergency you have a readily available supply of batteries around the house to store power. They can be found in your automobile, your motor boat, your spouse's car, your neighbor's, even your mother in law's car. All can be charged quickly and cheaply with your generator.

The Lawn Mower Deck

Here are a few tips for selecting a desirable lawn mower that will keep your time and labor to a minimum. The simpler the design of the lawn mower the better. You will need to bolt a set of mounting brackets and an alternator to the back of the deck, so choose one that is as flat as possible. We are also going to cut a slot in the backside of the deck so make sure this part is as flat up and down as possible too. Now take a look underneath. Some mowers have a shroud circling the cutting blade, try to avoid this on the rear side of the mower deck, as we want to keep our cutting to a minimum. And make sure your deck is made of metal, stay away from the plastic ones.

Motor Pulleys

We have used two different styles of pulley's, aluminum and cast iron. A strange thing happens when you remove the cutting blade and hub off your lawn mower engine..... It will not start! The flywheel on your motor is most likely made of lightweight aluminum and it needs the extra weight and momentum of the cutting blade assembly to rotate it through a complete revolution. A flywheels main purpose is to store energy so it can carry the crankshaft through the 3 non-power strokes of a 4-stroke engine. So, the flywheel must shoulder the burden of the rotation for 75 % of the time. If you take away some of it's mass on the motor shaft, it will not

run smoothly, heck, it won't even start. So if you have a lightweight flywheel you're going to need a pulley with some weight on it.

So, how do you tell if you have a cast iron or a lighter aluminum flywheel? Take your blade and hub assembly off your motor shaft and start pulling the cord. If after 4 hour's you haven't started the engine, well.... it's a pretty good bet that your flywheel is aluminum and you will have to use a heavier cast iron pulley. Or you can remove the top motor shroud that reveals the flywheel area, put a magnet near the flywheel fins. If the magnet doesn't stick, it's aluminum, if it does stick then you have a heavy cast iron flywheel and you can get away with using an aluminum pulley.

Our motor shaft was 7/8 " in diameter. It seems that as soon as you look for a pulley with a bore bigger than ¾ ", they are very difficult to find in the normal "Retail" stores. So we went to a bearing and transmission shop to buy our pulleys. We found aluminum pulleys gave good service but they didn't stand up to the long hours and wear and tear, as did the cast iron pulleys. So we opted for a cast iron pulley from a company called TB Woods. It uses a system with two parts, an inner bushing and a main pulley. The inner bushing has a split in it. When you tighten these two items together with the mounting bolts supplied, the split bushing closes onto the shaft with a tremendous grip. The pulley was also keyed, so once it's installed, it stays put. We used ½" wide pulleys on all our projects, with diameters ranging between 3"and 6". We'll discuss the proper pulley diameters later on.

Belts

We stuck with half-inch wide belts to simplify things. We also found out that not all belts are the same. Our alternator is designed to work best with an automotive type belt and our motor pulleys were designed to work best with utility/industrial belts. So, what's a fellow to do?

An automotive belt has a sharper angle or "pitch" on the side of its surface, so it will ride deeper in the motor pulleys. And if you are using a cheap pulley, it will start wearing a groove in the side of the pulley. The better choice is the industrial belts, but we have differences here too. The half-inch industrial belt is covered by two different styles, the "L" series and the "A" series. The "L" series belt is designed for fractional horsepower applications....light duty. On the other hand the "A" series belt was designed for full horsepower applications, heavy duty. It has more polyester cords built into it for more strength and durability.

We tried all 3 different types of belts and they all worked fine. For short-term use you can get away with using the "L" series fractional horsepower belts or the automotive belts. For heavy work loads and long term use we found the "A" series industrial belts gave us the best service. We purchased our industrial belts at the same place we got our heavy-duty pulleys, a commercial bearing and transmission shop. The general all-purpose belts can be found in the furnace sections of your hardware and building supply shops. And of course the automotive belts are available at your local garage or auto supply shop.

How to Modify Your Lawn Mower

You're going to have to modify the deck of the lawn mower somewhat, so you might not want to use the family's mower unless you're in a pinch. And don't use the one you borrowed from your neighbor either. You can pick up good used lawn mowers for a song, try garage sales, your local penny saver and newspaper classifieds. We put an ad in the newspaper stating " Wanted good used Lawn Mower" we then pleaded poverty and we got a dozen phone calls with great results spending only $25 dollars for a good mower with all the features we needed.

Okay lets get started, but first a word from our friend "Larry the Lawyer". If you build this generator or something similar, you must build it at Your Own Risk, and assume all risks related to it's construction and subsequent use. This tutorial is intended for educational purposes only. No guarantees are expressed or implied as to the accuracy of the information presented here. If you have any doubts consult with the experts you purchase your parts from, before attempting to carry out any of the procedures mentioned here.

Okay, lets get started tearing this baby apart. First remove the handles and cables. The removal is pretty straight forward with just a screwdriver. You can re-attach the throttle cable later or you can control the engine speed at the throttle control near the carburetor. You will most likely have a second cable coming off the handle to the flywheel brake, a safety feature introduced onto walk behind mowers in the early 80's.

Remove the cable at the handle and the brake lever next to the flywheel, you can leave the brake lever as is just flopping around (it may create some drag on your motor) or you can easily secure it off to the side. If you're not sure which side the lever should be positioned, just pull the starting cord. If it's difficult to pull, the brake is on, if it's easy, the brake is off, now tie the lever off with a twist tie or wire in this position.

Removing the Blade Assembly

Some of these blade hubs can get seized onto the shaft pretty bad after many years and acres of cutting grass. Spray some kind of rust loosening compound onto the area (WD40, RustBuster) if this doesn't work, you will have to use a pulley puller to remove the hub. We schmoozed our local machine shop proprietor into lending out his puller for free, we just left a deposit so he knew it would come back. Now, while your underneath and have the WD40 handy, spray the 3 or 4 mounting bolts you will find holding the motor to the deck. Spin the bolts out and remove your motor for the next couple of steps.

Cutting the Slot

The rear end of the lawn mower deck is a very convenient spot to mount our alternator with a couple of simple metal brackets. But you have to cut a slot in the back of the mower in order for the belt to reach from the motor pulley to the alternator.

You need to cut the slot 6" wide by 1" to 1 ½" tall on the rear vertical side of the lawn mower deck. You can cut this slot quite easily by using an Oxy/Acetylene cutting torch or you can use a grinder with a cutting wheel. And if you're in a really energetic mood, you can cut it by using a hacksaw.

We need to know exactly where the belt will come through the back off the mower deck, so we know where to cut our slot. So, let's install our motor pulley briefly so we can line up where our belt is going to come out the back. Place the motor pulley as far up the engine shaft as possible and yet still give it enough room to clear all obstacles such as mounting bolts. Now, look through the grass discharge chute. Place a straight edge on the bottom of the motor pulley and determine where the path of the drive belt will end up coming out of the back plate. Mark this spot. Now make this spot the exact center of your 6" by 1 ½" slot. Remember your belt is only ½ " thick so you will have plenty of clearance in case the spot you marked is not exactly centered.

Make sure to remove your motor once again before you start your cutting.

Now cut your slot using the methods described earlier. If you decide to use a hack saw, you might not be able to cut a "slot." Instead you will have to cut an entire 6" wide piece out from top to bottom. No problem, just bolt a strip of metal or angle iron for a crosspiece along the bottom of the mower deck, to give it some strength again.

Assembling The Project

Mounting the Alternator

In order to mount our alternator we are going to use brackets made from a slotted steel material commonly referred to as angle iron. The dimensions of the angle iron were 1 ½" wide and 1/16" thick. The pre cut slots in this material made it very convenient to make an adjustable bracket for the alternator. The 90 º angling of the metal gives it a lot of added strength, but it was also very easy to cut by hand using a hacksaw.

On the left hand side is our pivot bracket which we cut to a 7" length. On the right is the adjustable bracket, cut it to a 9" length. The pre-cut slots on this angle iron will allow you to move the bracket front to back so you can have the belt tension adjustment you need. On both brackets we want about 5" contacting the mower deck.

Now drill mounting holes on your mower deck 6 ½ " apart width wise and 2" to 3" inches along the length of the bracket depending on the pattern of the slots on your angled bracket material. Drill your holes 3/8" thick with the first set of holes ½" from the back edge of the mower deck.

We extended the slots in the right hand adjustable bracket by cutting the metal with a hacksaw so we could have a wider range of belt adjustment. Use 5/16" bolts with lock washers, now fasten the ends closest to the motor. Even though we selected a relatively flat mower deck, we still have some uneven contouring to deal with. No problem, we just use spacers on the two mounting bolts closest to the edge. Use whatever you have lying around your house, in our case thick washers and a couple of ½ " nuts worked perfectly.

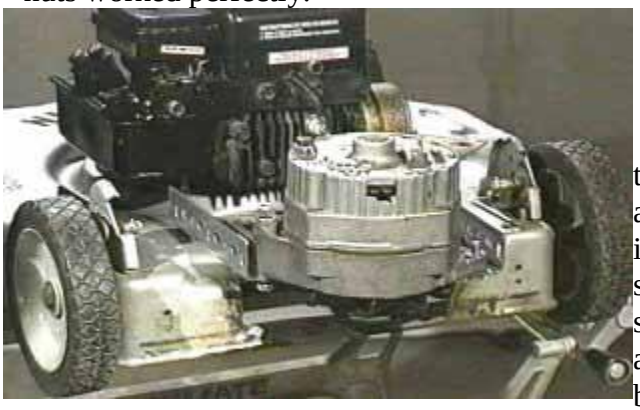

Now take your alternator and mount it with the pulley facing down. One side of your alternator has a longer molded mounting hole in its casing, this side will become our pivot side and is mounted with a 3" bolt. The right side of our alternator now becomes the adjustable side. You will need a shorter 1 ½" bolt to fasten it to the bracket. Use lock washers with your nuts and bolts as well.

Attaching the Pulley and Belt

Position your alternator so that the fan blade clears the mower deck between ¼" to ½". If it's too far away from the deck, you will notice more vibration. Now flip the whole unit over and attach your motor pulley, we used a 5 " diameter pulley (more on this later). Next, we need a drive belt, but what length? Here's a tip for getting the right size belt on your first trip to the store. Measure the distance between the two outer edges of the alternator and motor pulleys in their final position. Mark this measurement down. Decide ahead of time if you want the lighter duty "L" series or the heavy duty "A" series. Now head down to your local building supply or commercial bearing store to buy a belt.

When you get there take 2 pulleys off the shelf with the same diameter as your alternator and motor pulleys. Next place a ½" belt around them and stretch the belt out. Do this until you find a length of belt that matches the measurement you marked down from your project at home. Don't do what I did. I drove down to the store with my whole project in the trunk of my car, then ran back and forth into the store exchanging belts until I found one that fit, all the while looking like a complete dork!

Now, place your belt onto the pulleys, grab the right side adjustable
bracket with a pair of Vise-grip pliers, pull toward you until you've
reached a desired belt tension and then tighten the mounting bolts.
Your next step is a simple wiring of the project.

Hooking Up Your Electrical Connections For The Alternator

As was mentioned before, because of safety and ease of hook up, stick with the GM style alternator with a Built in Voltage Regulator. If you are not sure, ask the people you are buying the alternator from, if they can't answer your question consult an automotive parts professional. "No guarantees are expressed or implied as to the accuracy of the information presented here. If

in doubt consult an automotive wiring professional before you attempt any wiring." If you make a mistake wiring the alternator you run the risk of damaging your batteries, electronic gear and worst of all causing personal injury. We set out to make this project safe and simple, so we are going to concentrate on the easiest hook up.

The electrical connections for your alternator are a simple but important 4-wire hook up. It was mentioned earlier that the GM alternator should come equipped with a 2 wire molded connector/harness. If not, ask for it at the point of sale or you can purchase one at an auto supply store. Ask for a 2-wire harness plug for the GM style alternator with built in regulator. They only cost a couple of bucks.

Attach your harness into the connector slot on the alternator casing. The molded harness only fits one way and ensures you don't get your wires mixed up, so Make Sure You Use It ! You might also want to attach eyelet connectors to the end of the two wires on for your convenience.

Different molded connectors may have different colored wires. We are going to ignore the color of the wires and instead concentrate on the wire identification numbers and letters on the alternator casing. Here are your basic hook ups.

Basic Hook Up

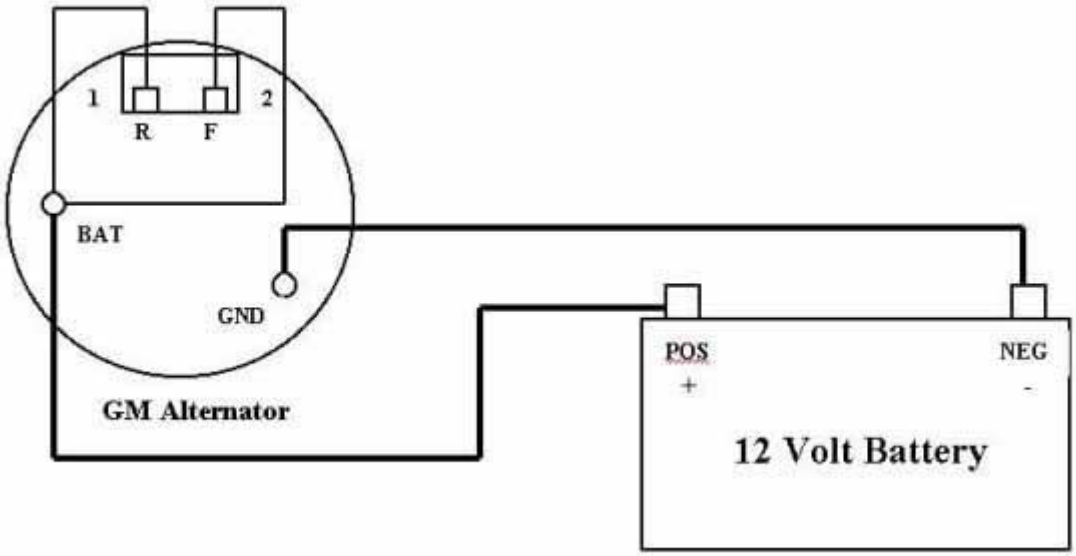

Consult a parts professional for additional wiring information.

1 or R Terminal is the lead that supplies power to the rotor field of the alternator. Connect this to the "BAT" terminal of the alternator or the POSITIVE terminal of your battery. NOTE: when you are not using your system you have to disconnect this lead as it is now drawing power from your battery and will continue until it's completely discharged.

2 or F Terminal is the voltage sensing line for the alternator. Connect this directly to the "BAT" terminal on the alternator or to the POSITIVE terminal of the battery as well.

On/Off Switch

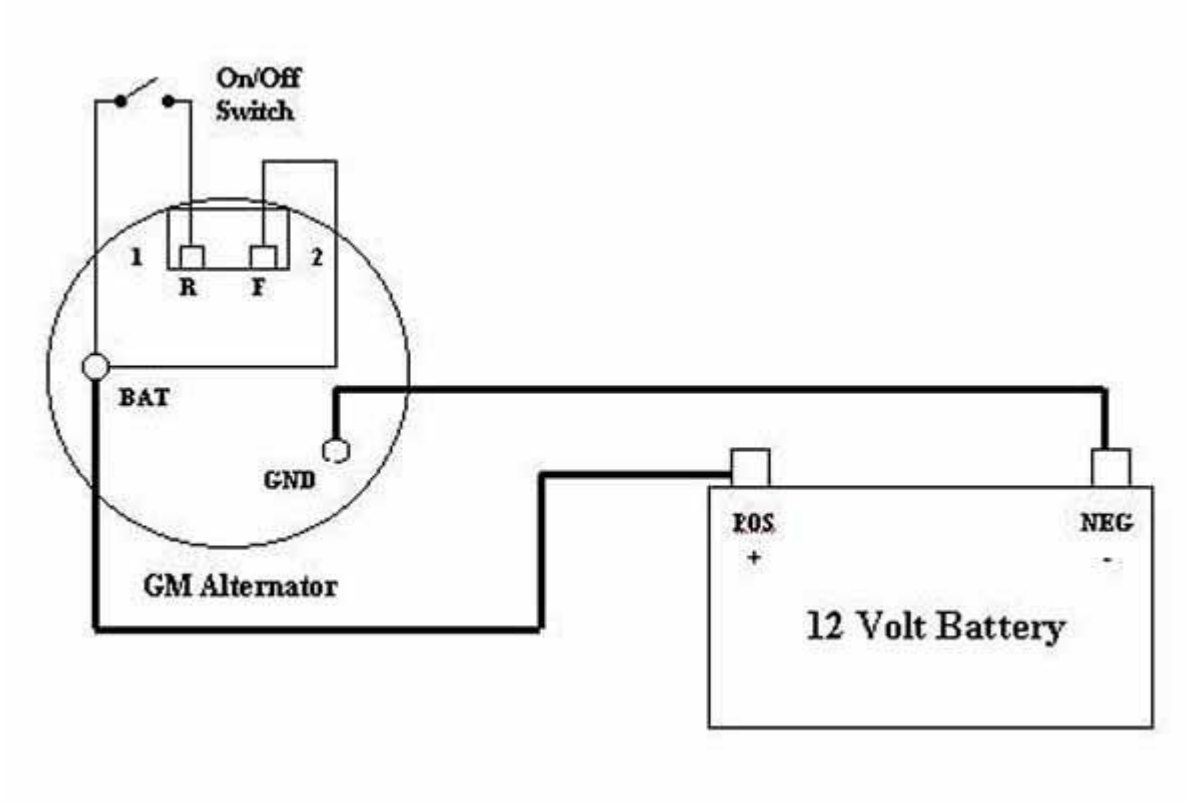

Consult a parts professional for additional wiring information.

1 or R For safety and convenience reasons we have installed a simple on/off switch in the # 1 circuit. When we are not using our generator we can simply turn the switch off and it will preserve the charge in our battery. Another important note is that when this terminal is energized, so is the rotor field inside the alternator.

You will now notice a lot of drag when you try to turn the alternator. Go ahead and try to start the motor, you will pull that cord until your tongue hangs out. You will need to start the motor with the switch "off" then throttle up to your desired speed. You can then turn your switch "on" and introduce the electrical load to the alternator and motor.

This switch also allows us to avoid "sparks" during the unsafe practice of hooking up wires to the battery and alternator while the generator is running. In the presence of vapors coming off the batteries and gas tank, it's a good idea, so PLEASE USE IT !!!

Some Testing Results

What is the ideal size pulley to use?

I hear the subject debated at great lengths. Actually any size pulley between 3" and 8" will work, but there are some differences. An 8" pulley will spin your alternator at a high r.p.m. but will give you very little torque. When it comes time to engage your alternator, it will drag your motor down until it stalls. A 3" pulley on the other hand will give you lots of torque, but a lower r.p.m. at the alternator pulley.

We have discovered that if we try to duplicate what goes on underneath the hood of a car and apply this to our home built generators, we will come up with some favorable results. A quick peek under the hood of a car tells us the motor pulley should be about 5" to 6" in diameter. We found this diameter of pulley gives us an ideal r.p.m for the alternator, with an adequate amount of torque too....But.

Motors With The Same Horsepower Do Not Have The Same Output

We discovered another neat characteristic of the Briggs & Stratton **Vertical** shaft lawn mower engine. We have a **Horizontal** shaft Briggs & Stratton motor of the same horsepower. And we consistently get higher revs from the horizontal shaft motor. We couldn't figure this out at first. Both the motors were in good shape well tuned etc, but? So, I searched through the motor technical manuals for the answer.

According to manufacturer specs, they set the throttle on the vertical shaft mower to approximately 80% of its maximum output. This gives the motor a nice little feature when a schlep like me starts cutting into foot tall **wet** grass. When the motor bogs down, a device on the engine called a "governor" senses the drastic drop in RPM's and immediately allows the engine to throttle up to overcome the extra load, so the motor will not stall. When the patch of wet grass passes by, the engine then throttles back to its normally set speed.

So if you come along and decide to attach a belt and an alternator to this motor (like we just did) fire it up, engage your alternator and dump the load on the motor. Guess what? The motor is gonna think it's in wet grass Heaven. So, if you're using a 5" pulley on your project like we did, you may find that the motor will be dragged down to a stall even with a moderate load applied to it. So, how do we solve this? Well there are a couple different ways. One is to reduce the size of your pulley.

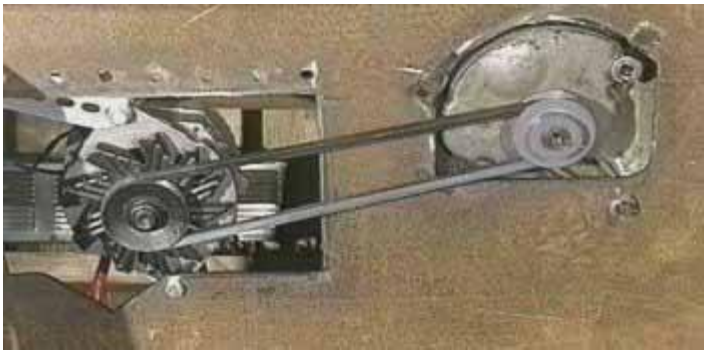

We experimented with a 3" pulley and got some good results. The smaller pulley lets the alternator produce its voltage at significantly lower throttle settings, the trade off of course is a lower amount of current (power) coming out of the alternator.

Or,...there is another option. We discovered a handy little gadget that helps us solve the problem of engine stalling when you engage the alternator. It's a GM style headlight/dimmer switch. We installed this into the #1 (R) circuit of the alternator harness. The adjustable dimmer in the switch is actually a variable resistor or otherwise knows as a rheostat. It works by using resistance to adjust the flow of current to the alternator's rotor field. The more resistance you have, the less current will flow. This in turn creates a weaker or stronger magnetic field in the alternator, which will then give us more or less power off the alternator. Huh?

Let me explain it in a more practical sense. Let's say you have a generator like we just built operating at normal running speed spinning a 40 Amp alternator. You decide to charge a very low battery. Even if you rev up the motor, when you go to attach your lead from the alternator to the battery, the alternator is going to sense a low battery charge and will try to out-put a large amount of current. This creates a huge drag on the alternator which in turn bogs down the motor usually until it stalls.

But, this is what happens when you have the dimmer switch in the #1 circuit. You set the switch at its highest resistance level. Now start turning the knob slowly counter-clockwise. As you keep turning the knob to the left, the resistance level in the switch drops allowing more current into the alternator's rotor field, which in turn allows more alternator output. You will notice at this point the alternator is now starting to "load" the motor. The beauty of this method is while you slowly turn the switch and load the motor, you can now offset the load with a higher throttle setting on your motor. You can then adjust the switch some more, then increase the motor revs some more until you get a desired speed, without stalling. This system allows a nice gradual smooth adjustment of the alternator's output. It works really slick, try it. And the switches are cheap too, we picked up ours at an auto wrecker for 5 bucks.

Variable Resistance Dimmer Switch Hook Up

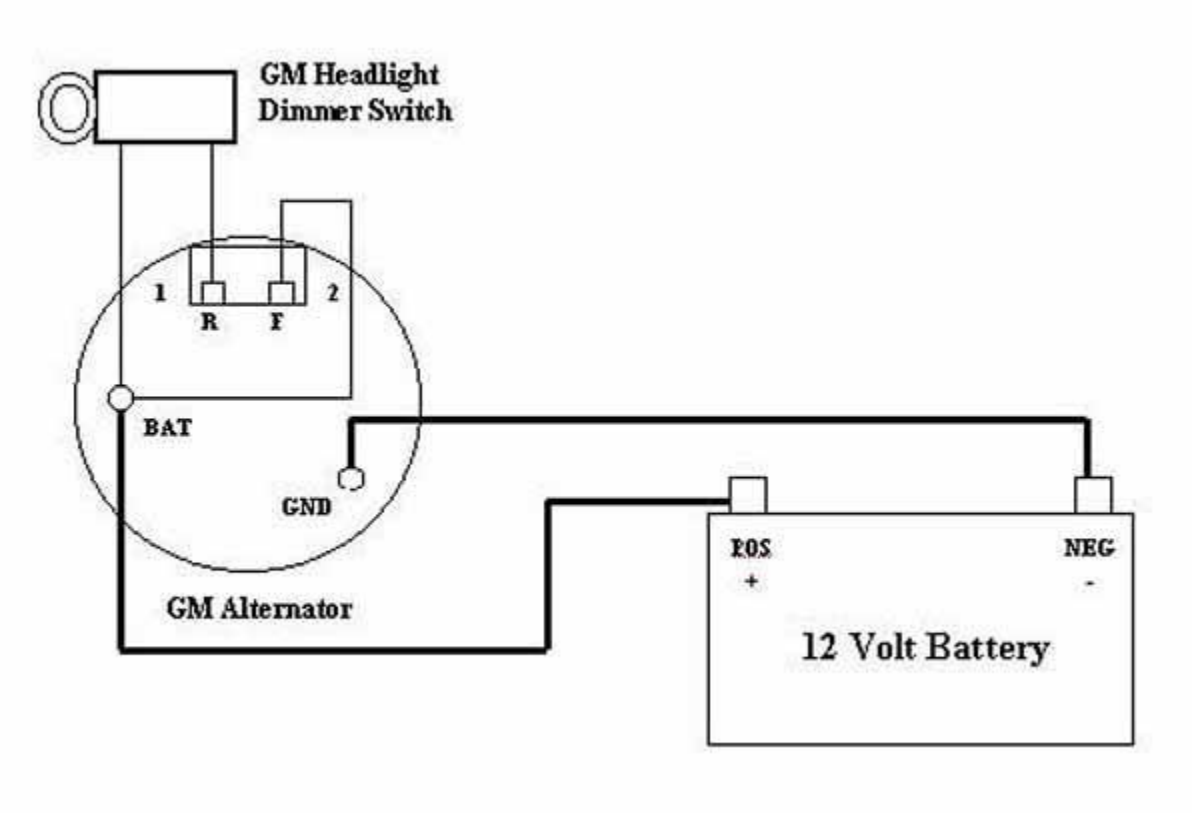

Consult a parts professional for additional wiring information.

Which one of these two methods will work better for you? It's hard to say, depending on the type of motor you will use. How old is it? Is it tuned up? What kind of parts you installed on your project? No two set ups are the same, but at least you have some options. Try what works best for you and stick with it.

Some Final Notes

You can now re-attach your handles. A really handy option is to hook up your throttle cable again and then mount your GM dimmer switch next to your throttle control on the handle. You now have complete control of your generator right at your finger tips.

So, there you have it. You are now armed with the information to be electrically independent should the need ever arise. Stay healthy and stay powered.